Linux Performance Observability

https://www.brendangregg.com/linuxperf.html

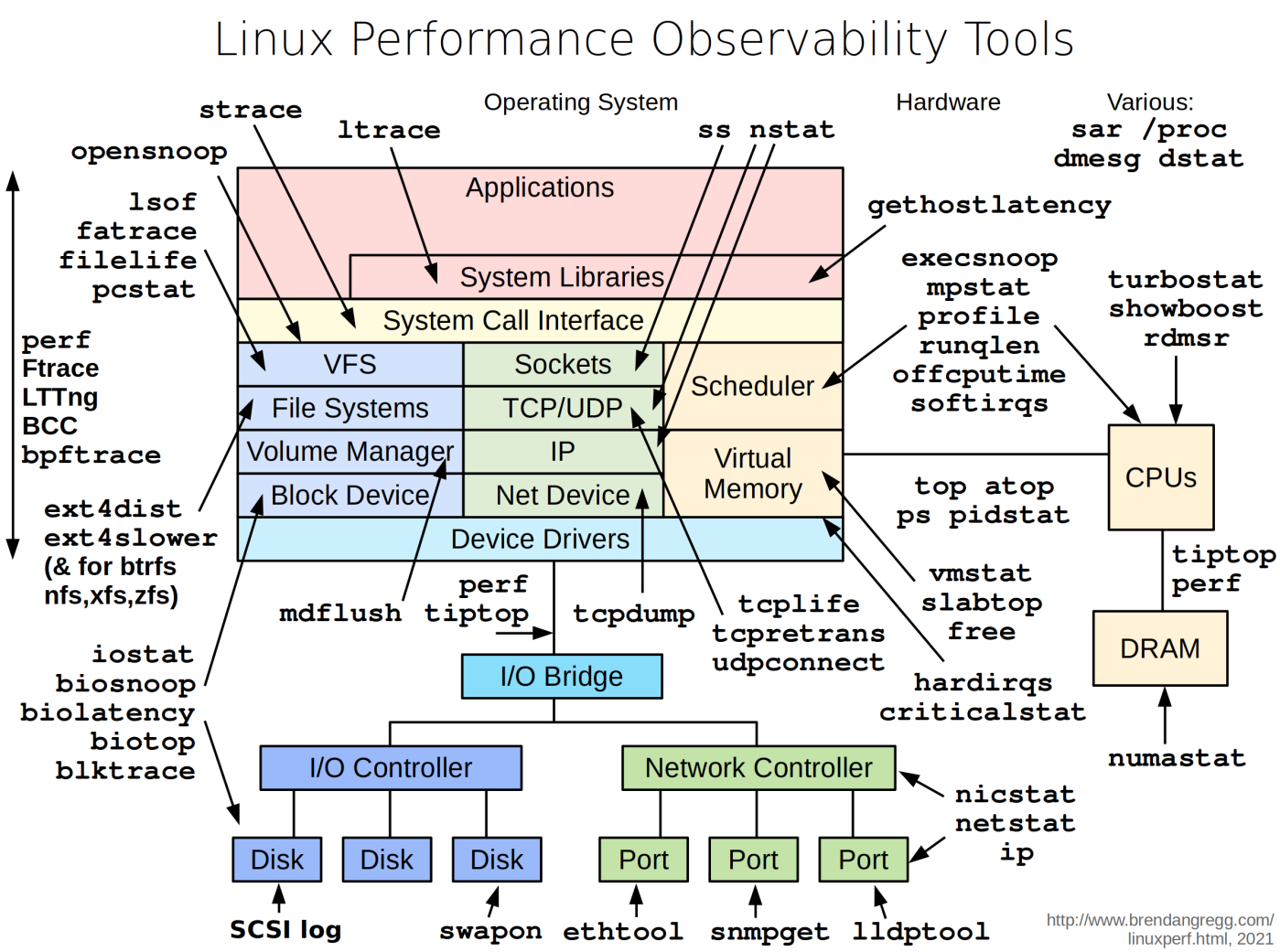

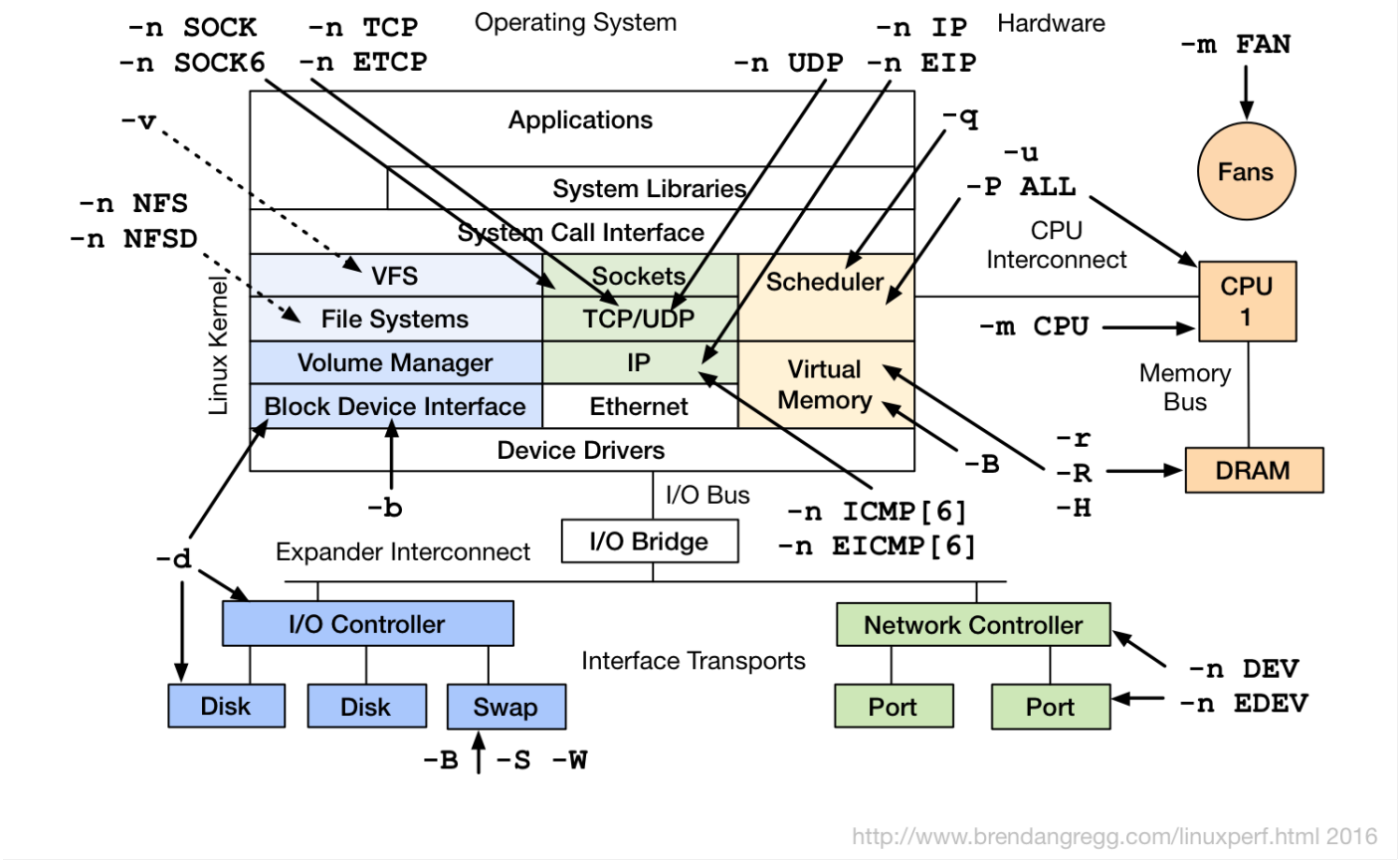

#end

Revision #1
Created 2024-04-30 15:52:52 UTC by bluecrow76
Updated 2024-07-04 23:11:26 UTC by bluecrow76